EXXEL PACIFIC
GENERAL CONTRACTORS

Request For Information - 112

The Cora Apartments (19 W Harrison)

DATE: 03/22/2017

To:	**John Whitlow**	**From**	**Jola Bielecki**
	VIA Architecture 1809 7th Avenue, Suite 800 Seattle, WA 98101		The Cora Apartments (19 W Harrison) 19 W Harrison Seattle, WA 98109
Phone:	206-995-8872	**Phone:**	425-502-1573
Fax:		**Fax:**	360-671-7616
Email:	jwhitlow@via-architecture.com	**Email:**	jolab@exxelpacific.com
CC:			

Subject:	**Kitchenette in Lobby Clarification**	**Status:**	**Open**
Drawing #:	A0201, ID101, ID300	**Spec Sect #:**	
Addendum:		**Submittal #:**	

Potential Schedule &/or Cost Impacts:

Schedule Impact (days):
Cost Impact:

Information Requested: **Date Required: 03/28/2017**

Please verify if the Kitchenette area in the Lobby is to be ADA accessible, and if it the current cabinet layout (see ID 300) meets the ADA requirements. Provide the revised layout if needed. Also, provide detailed information for the material and thickness of the countertop and backsplash. Specify whether the sink is undermount or top mounted, and specify the location of the electrical outlets.

Suggestion:

Requesting Firm: Exxel Pacific, Inc.

Submitted By: *Jola Bielecki*

Response:

Date Response

JGID NOTE: ALL ADA COMPLIANCE TO BE VERIFIED BY OTHER.

Jennie Gruss Interior Design
1419 S. Jackson St. Suite 11
Seattle, WA 98144

☐ Approved ☒ Approved as Corrected
☐ Rejected ☐ Revise and Resubmit
☐ Submit Specified Item

This review is only for general conformance with the design concept of the project and general compliance with the information given in the Contract Documents. Corrections or comments made on the shop drawings during this review do not relieve Contractor from compliance with the requirements of the plans and specifications. Approval of a specific item shall not include approval of an assembly of which the item is a component. Contractor is responsible for: dimensions to be confirmed and correlated at the jobsite; information that pertains solely to the fabrication processes or to the means, methods, techniques, sequences and procedures of construction; coordination of the Work of all trades; and for performing all work in a safe and satisfactory manner.

Date 3-28-17 By Liz Dunigan

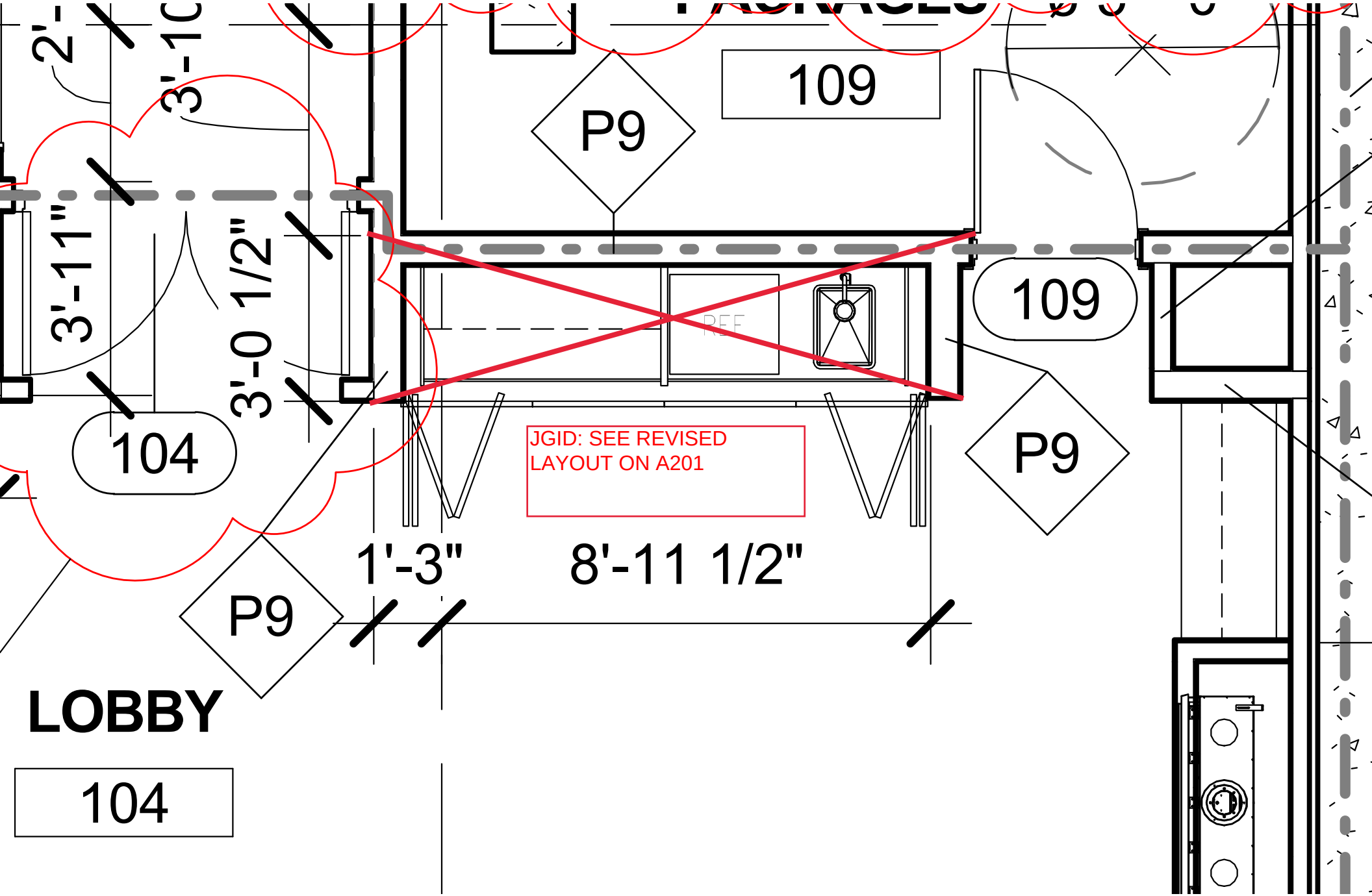
2'-
3'-1C
3'-11"
3'-0 1/2"
104
P9
109
109
P9
P9
REF
JGID: SEE REVISED
LAYOUT ON A201
1'-3"
8'-11 1/2"
LOBBY
104

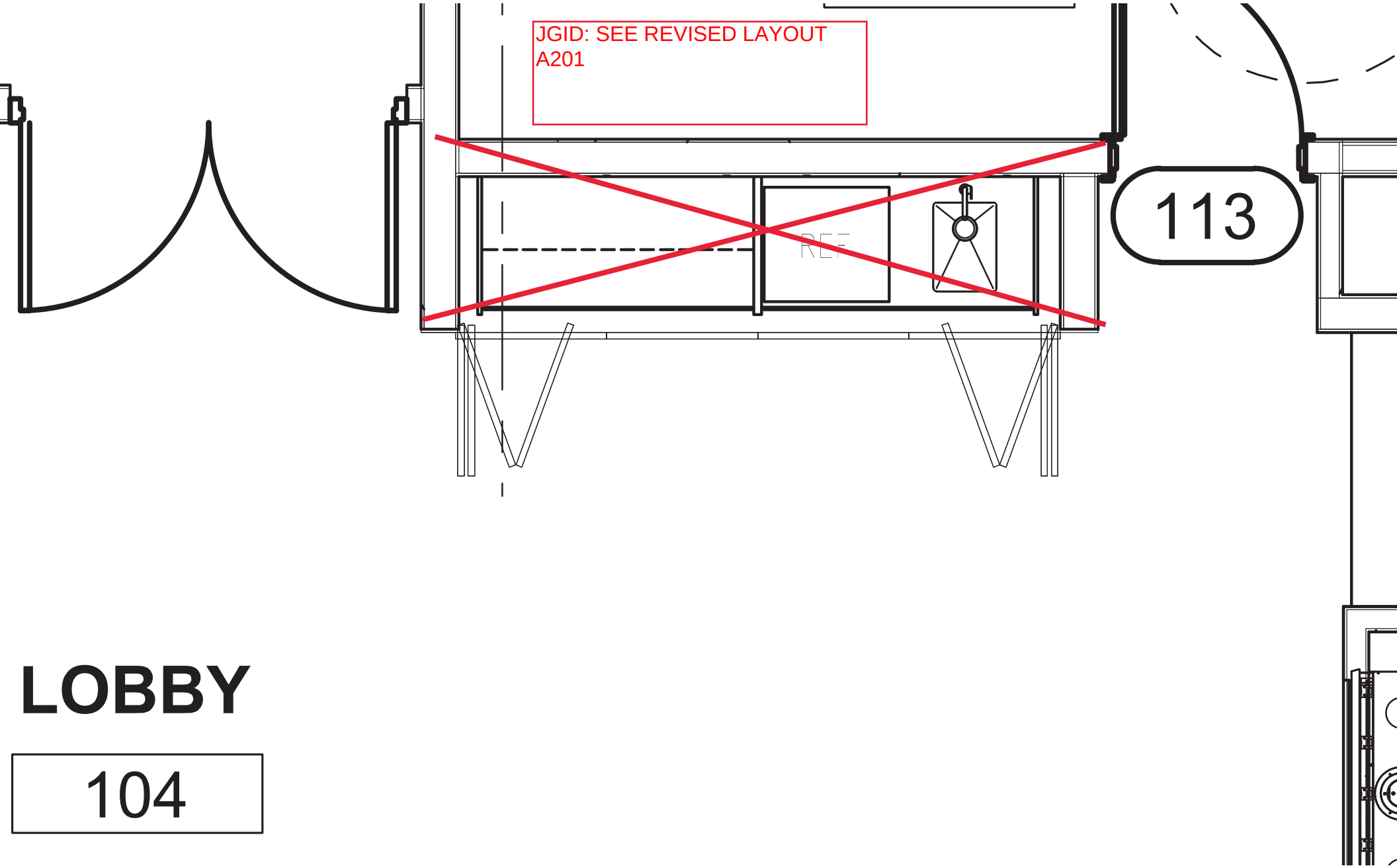
JGID: SEE REVISED LAYOUT
A201
REF
113
LOBBY
104

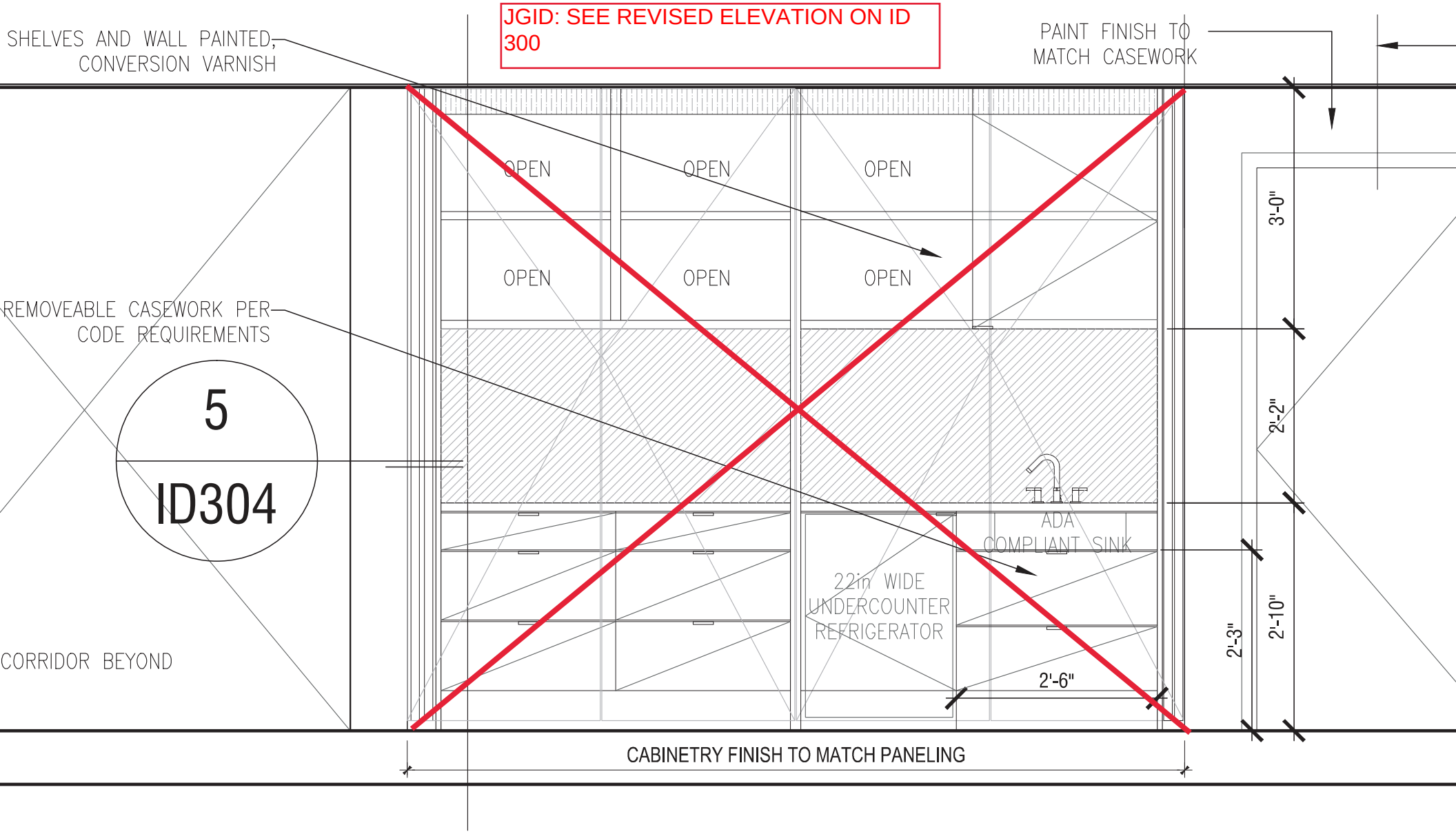

LOBBY, SALES LOUNGE, & COMMON AREA

SECTION ELEVATION - NORTH

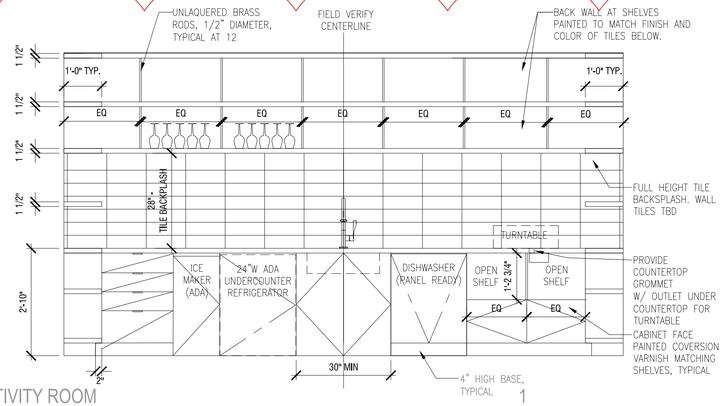

ACTIVITY ROOM 1

EAST ELEVATION 1/2"= 1'-0"

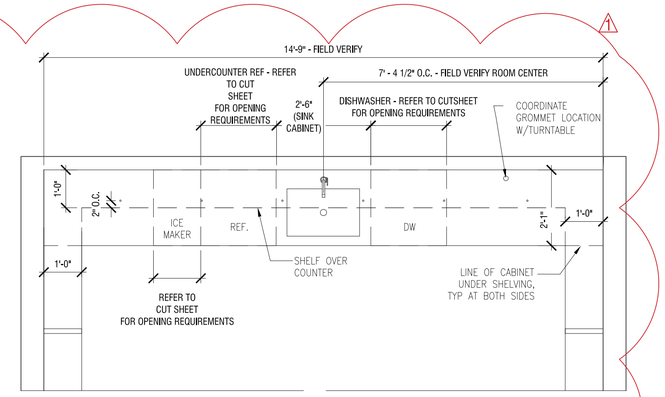

ENLARGED ACTIVITY ROOM FLOOR PLAN 1A

EAST WALL ACTIVITY ROOM 1/2"= 1'-0"

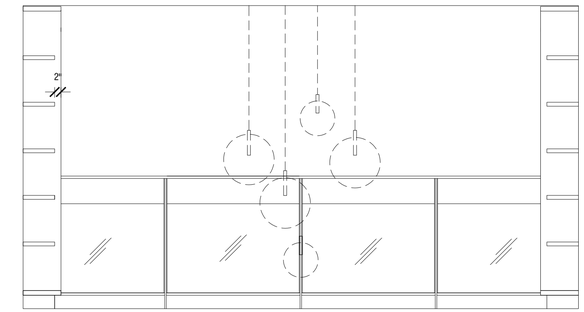

COMMON AREA 2

WEST ELEVATION 1/2"= 1'-0"

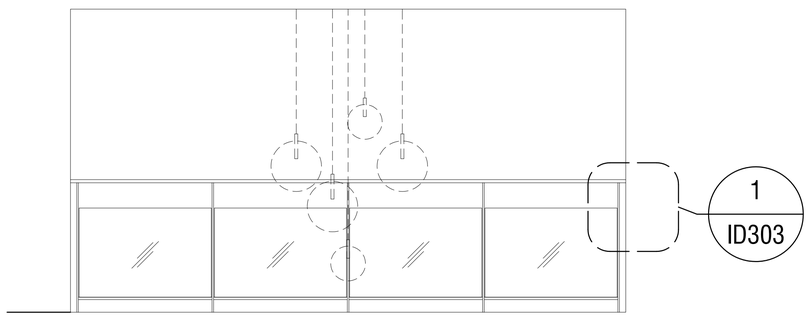

MEZZANINE RAIL 4

NORTH ELEVATION 1/2"= 1'-0"

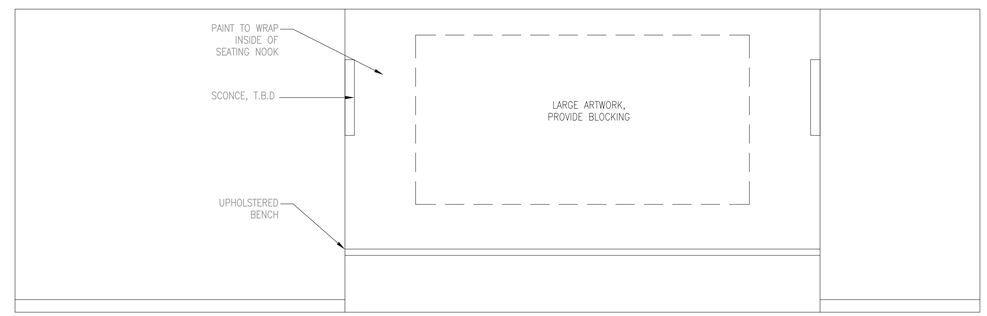

ELEVATOR CORRIDOR BENCH 5

SOUTH ELEVATION 1/2"= 1'-0"

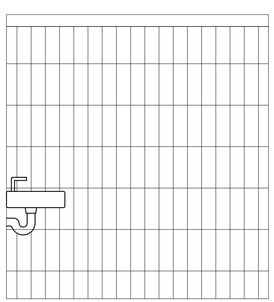

ADA WC 6

ELEVATION 1/2"= 1'-0"

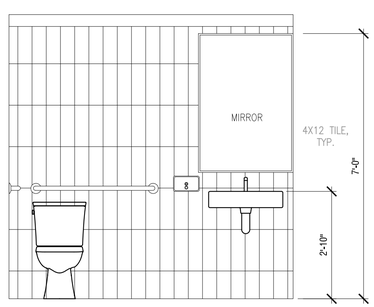

ADA WC 7

ELEVATION 1/2"= 1'-0"

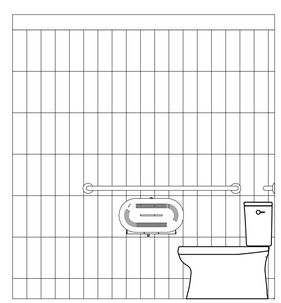

ADA WC 8

ELEVATION 1/2"= 1'-0"

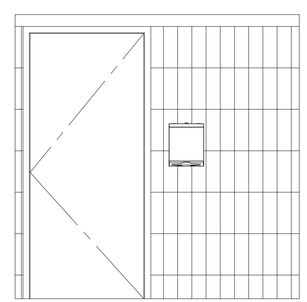

ADA WC 9

ELEVATION 1/2"= 1'-0"

C:\Users\Laurel Wilson\Documents\Gruss_Harr

PROJECT:

19 W. HARRISON, LLC
19 WEST HARRISON
SEATTLE, WA 98119

1 11/02/16 ACTIVITY ROOM ELEVATION REVISION

1501 HARRISON

19 WEST HARRISON
SEATTLE, WA 98119

date:
05 FEBRUARY 2016
FOR CONSTRUCTION

drawn by:
ALC

scale:
1/2" = 1'-0"

title:
INTERIOR ELEVATIONS

number:
ID302

© COPYRIGHT 2015 JENNIE GRUSS

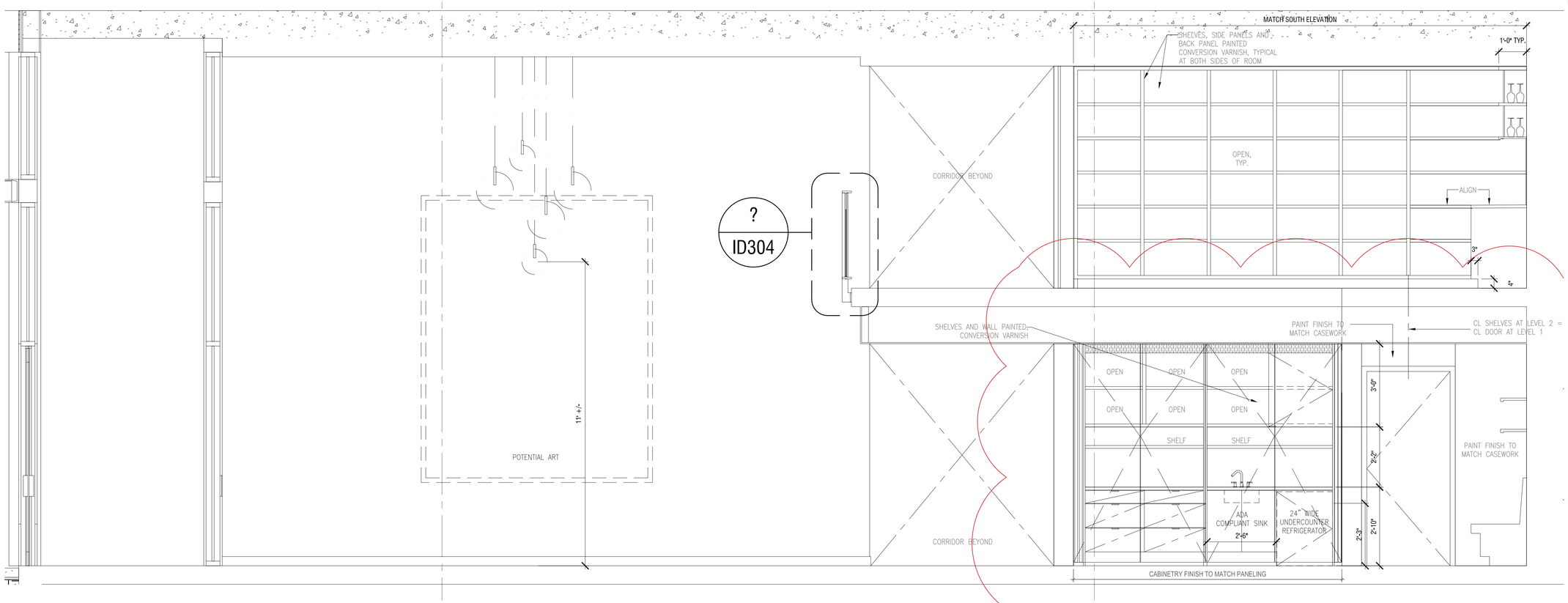

LOBBY, SALES LOUNGE, & COMMON AREA 1

SECTION ELEVATION - NORTH 1/2" = 1'-0"

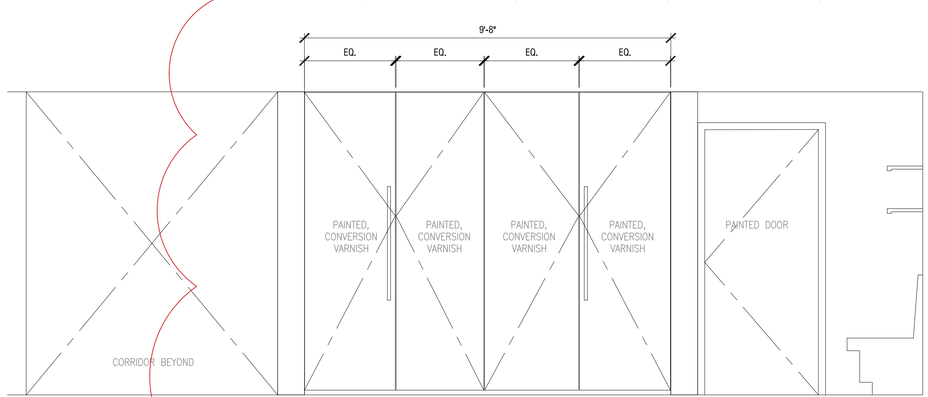

SALES LOUNGE 2

NORTH ELEVATION 1/2"= 1'-0"

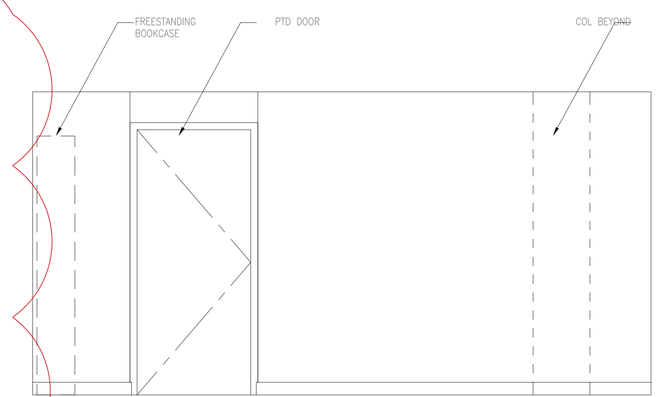

PACKAGE ROOM 3

SOUTH ELEVATION 1/2"= 1'-0"

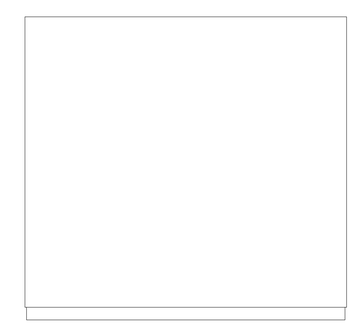

PACKAGE ROOM 4

EAST ELEVATION 1/2"= 1'-0"

C:\Users\Laurel Wilson\Documents\Gruss_Harr

PROJECT:

19 W. HARRISON, LLC
19 WEST HARRISON
SEATTLE, WA 98119

11/02/16 ACTIVITY ROOM ELEVATION REVISION

1501 HARRISON

19 WEST HARRISON
SEATTLE, WA 98119

date:
05 FEBRUARY 2016
FOR CONSTRUCTION

drawn by:
ALC

scale:
1/2" = 1'-0"

title:
INTERIOR ELEVATIONS

number:
ID300

© COPYRIGHT 2015 JENNIE GRUSS

NOTE: REFER LANDSCAPE DRAWINGS FOR DETAILS OF STREET LEVEL AND ROOFTOP LANDSCAPE TREATMENT

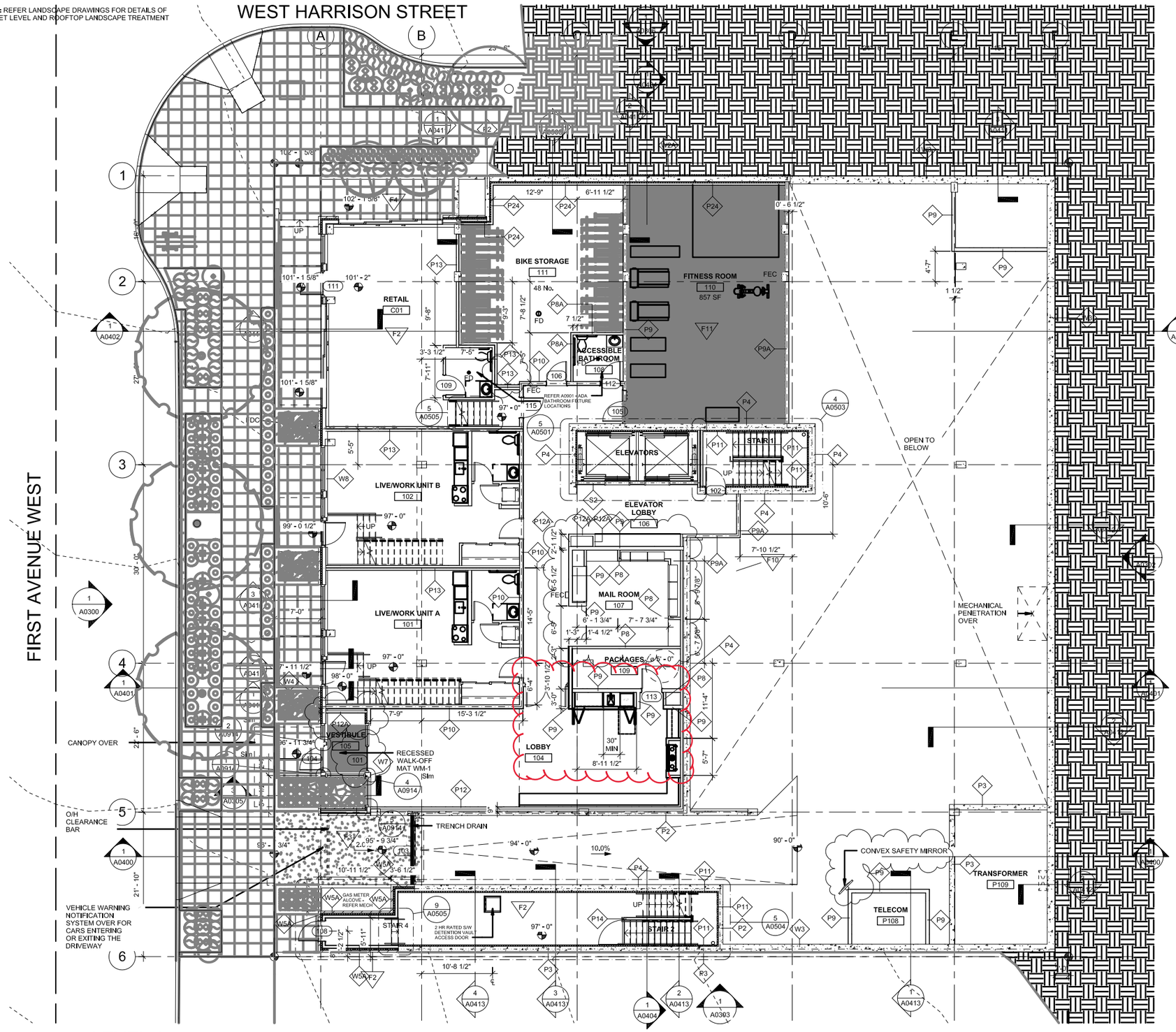

1 LEVEL 1
1/8" = 1'-0"

WALL LEGEND

- 1-HR FIRE PARTITION, SEE A1011
- 1-HR FIRE PARTITION, SEE A1011
- 2-HR FIRE BARRIER, SEE A1011
- 3-HR FIRE BARRIER, SEE A1011
- P1 — WALL ASSEMBLY TAG, SEE A1000
- P1 / C5 — STACKED WALL ASSEMBLY TAG

PLAN SYMBOLS

- FEC — FIRE EXTINGUISHER AND CABINET
- STACKED WASHING MACHINE & ELEC. DRYER. VENT DRYER TO EXTERIOR
- SIDE BY SIDE WASHING MACHINE AND ELEC. DRYER. INSTALL WASHER TO LEFT. VENT DRYER TO EXTERIOR
- BICYCLE RACK
- RESIDENT STORAGE LOCKER; TOP OF LOCKER MINIMUM 18" BELOW SPRINKLER DEFLECTOR
- ROOF DRAIN AND OVERFLOW, SEE PLUMBING
- GARAGE FLOOR DRAIN, SEE PLUMBING
- FD — FLOOR DRAIN, SEE PLUMBING
- ROOF ANCHOR
- ELASTOMERIC COATING PER BEE WP DWGS
- DS — DOWNSPOUT

GENERAL PLAN NOTES:

1. PROVIDE AND VERIFY A 4" CLR DIM BETWEEN ROUGH OPENING AND NEAREST PERPENDICULAR WALL @ ALL INTERIOR DOORS UNO

FIRE RESISTIVE CONSTRUCTION NOTES:

1. MECHANICAL, ELECTRICAL & PLUMBING SUB-CONTRACTORS TO COMPLY W/FIREBLOCKING & FIRE STOPPING REQUIREMENTS @ ALL PENETRATIONS OF RATED WALL, FLOOR-CEILING & ROOF-CEILING ASSEMBLIES. ALL SEMI-RECESSED OR RECESSED FIRE EXTINGUISHER CABINETS SHALL BE UL LISTED FOR USE IN 1-HR OR 2-HR FIRE RESISTIVE CONSTRUCTION OR WRAP INSIDE OF STUD SPACE W/5/8" TYPE X GWB (FIRETAPED) IF ALLOWED BY GOVERNING BUILDING OFFICIAL/INSPECTOR. SEE A1001 FOR ACOUSTIC DETAILS
2.
3.

CONSULTANT

PROJECT
19 W Harrison
Seattle, WA 98119
76114

OWNER
19 W Harrison LLC

PROFESSIONAL SEAL

DESIGN TEAM
JB
PRINCIPAL
JB
PROJECT MANAGER
PN
PROJECT ARCHITECT
PN
DRAWN BY
CHECKED BY

DRAWING SET DESCRIPTION
PROGRESS PRINTS

REVISIONS

No.	DATE	DESCRIPTION
1	08/21/2015	BUILDING PERMIT CORRECTIONS
2	10/09/2015	BUILDING PERMIT CORRECTIONS RND 2
3	11/18/2015	SERVICES COORDINATION
4	12/17/2015	GMP REDLINES

SHEET TITLE
LEVEL 1 FLOOR PLAN

SHEET NUMBER
A0201

ISSUE DATE
01.25.2016

ALL RIGHTS RESERVED BY VIA ARCHITECTURE INCORPORATED. THIS DESIGN IS NOT TO BE USED OR REPRODUCED WITHOUT THE CONSENT OF VIA ARCHITECTURE INCORPORATED.

DPD STAMP

KOHLER®

ADA UNDERMOUNT SINK FOR KITCHENETTE AND ACTIVITY ROOM

Strive™
Under-mount Bar Sink
K-5287

Features
- Single bowl.
- Squared bowl.
- Inclues bottom bowl rack.
- 15" (381 mm) x 15" (381 mm)

Material
- 16-gauge stainless steel.

Technology
- Includes SilentShield® sound-absorption system.

Installation
- Under-mount.
- Includes installation hardware.

Optional Accessories
K-8801 Sink Strainer

Components
Additional included component/s: Hardware kit (2 required), Cut-out template, and Bottom bowl rack.

ADA

Codes/Standards
ASME A112.19.3/CSA B45.4
ADA
ICC/ANSI A117.1

Lifetime Limited Warranty for Kohler Stainless Steel Sinks
See website for detailed warranty information.

ADA UNDERMOUNT SINK FOR KITCHENETTE AND ACTIVITY ROOM

Strive™

Under-mount Bar Sink

K-5287

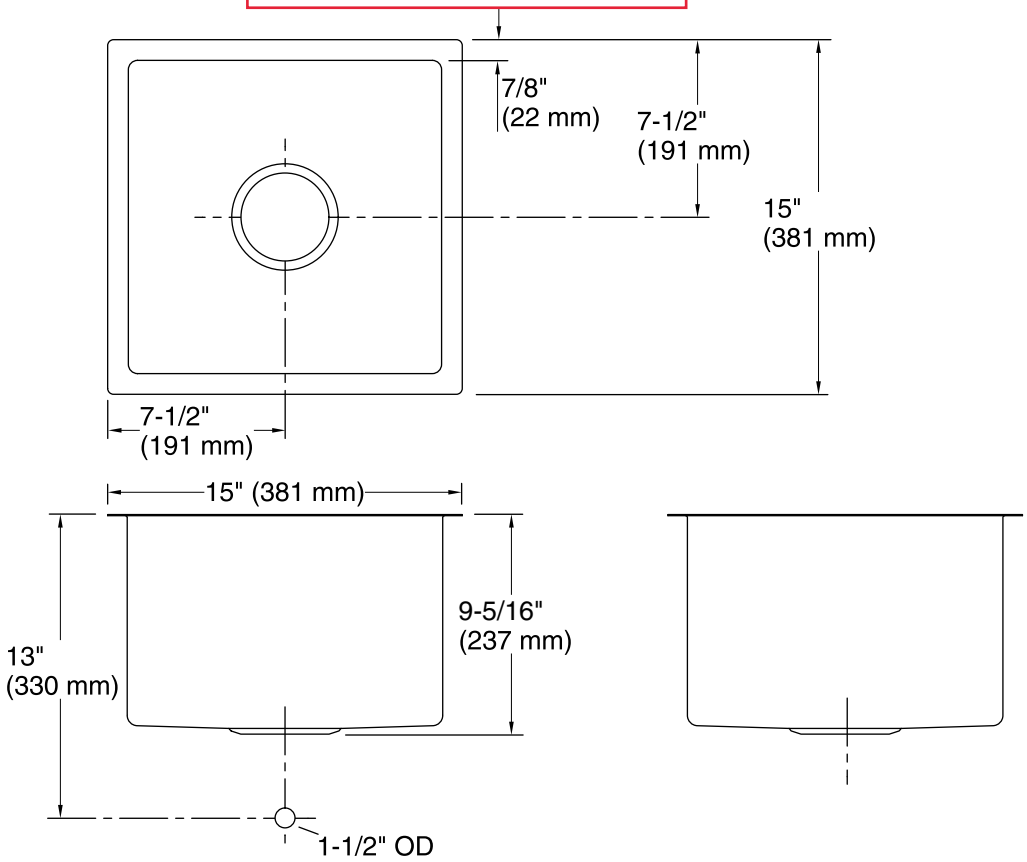

Technical Information

All product dimensions are nominal.

Bowl configuration:	Single
Installation:	Under-mount
Min. base cabinet width:	18" (457 mm)
Bowl area	Length: 13-1/4" (337 mm) Width: 13-1/4" (337 mm) Bowl depth: 9-5/16" (237 mm) Water depth: 9" (229 mm)
Drain hole:	3-11/16" (94 mm)
Template:	1207219-7, not required, not included

Notes

Install this product according to the installation instructions.

ADA compliant when installed to the specific requirements of these regulations.

15” CLEAR ICE MAKER

H50IMS ~~15” SIGNATURE SERIES MODEL~~
H50IMS-AD 15” ADA-COMPLIANT MODEL

Perlick®

QUALITY & INNOVATION THAT **INSPIRES**

NSF c UL US

Stainless Steel Door Model

Stainless Steel Door Model

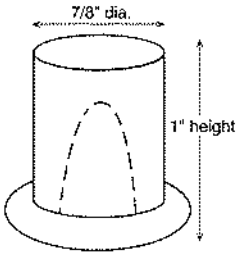

Cube Dimensions

ADA ICE MAKER AT ACTIVITY ROOM

GENERAL CLEAR ICE MAKER FEATURES

- All models are UL-rated for outdoor use
- Available in Signature Series and ADA Compliant models
- Durable stainless steel exterior
- Front-vented forced-air refrigeration system
- Produces up to 55 lbs. of ice per 24 hour period
- Storage capacity of 22 lbs. of ice
- UL-approved for outdoor use
- Power switch accessible without panel removal
- Easily disassembled water circuit for easy cleaning
- R-134a refrigerant
- Optional drain pump and toe kick available
- Produces a distinctive top hat shape that is clear of imperfections
- Shape also prevents ice from clumping like traditional ice makers
- Full one year warranty

PRODUCT SPECIFICATIONS

	~~**H50IMS (Signature Series)**~~	**H50IMS-AD (ADA Compliant Series)**
Overall Width	~~14-7/8” (37.78 cm.)~~	14-7/8” (37.78 cm.)
Overall Height	~~33-1/2” (85.09 cm.)~~	31-1/2” (80.01 cm.)
Overall Depth	~~22-9/16” (57.31 cm.)~~	22-9/16” (57.31 cm.)
Operating Limits	**Ambient Temp Range:** 45°-100°F, **Water Temp Range:** 45°-95°F, **Water Pressure:** 7-113 psig, **Voltage Range:** 104-127V	
Electrical	115V, 60Hz., 1 Phase, 3.4 amps	
Plumbing	1/2” FTP Water Inlet, 1/2” FTP Drain	
Shipping Weight	115 lbs (52.16 kg.)	

Form No.H50
Rev. 05.19.2016

8300 W. Good Hope Rd. • Milwaukee, WI 53223 • (800) 558-5592 • Fax: (414) 353-7069 • perlick.com

Perlick is committed to continuous improvement. Therefore, we reserve the right to change specifications without warning.

SIGNATURE SERIES MODELS

H50IMS-L	Solid stainless steel door, hinged left
H50IMS-R	Solid stainless steel door, hinged right
H50IMW	Wood overlay door, hinged left or right

ADA COMPLIANT MODELS

H50IMS-ADL	Solid stainless steel door, hinged left
H50IMS-ADR	Solid stainless steel door, hinged right
H50IMW-AD	Wood overlay door, hinged left or right

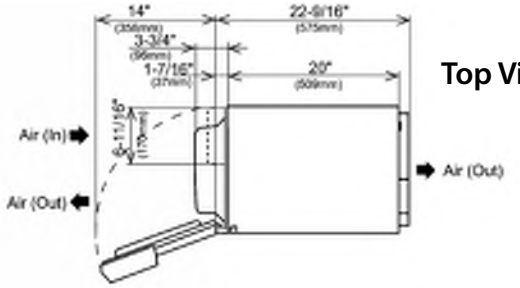

Top View (Signature and ADA Compliant Series Ice Makers

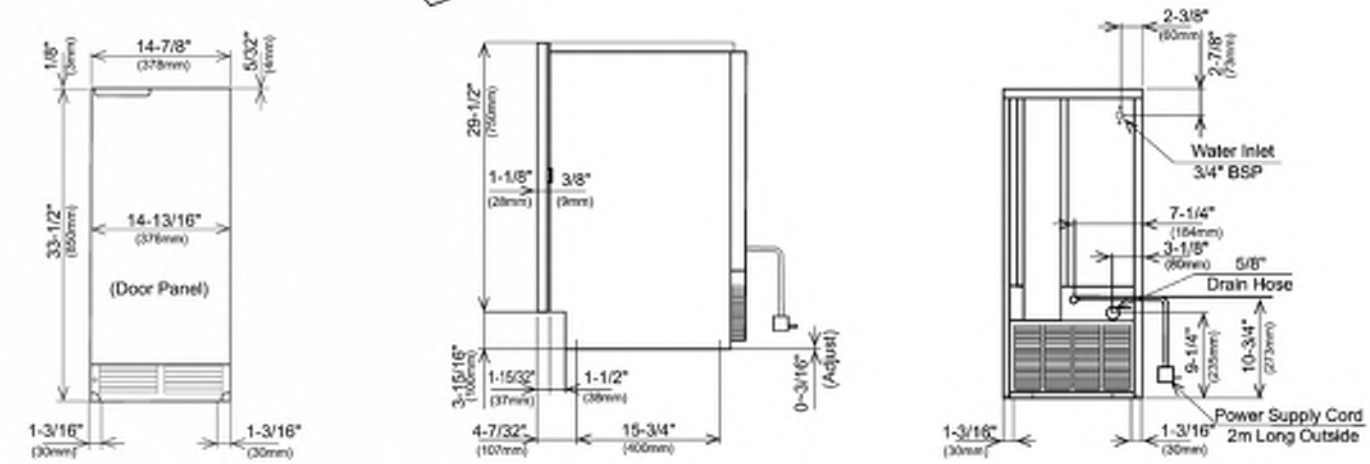

Signature Series Front, Side and Back View

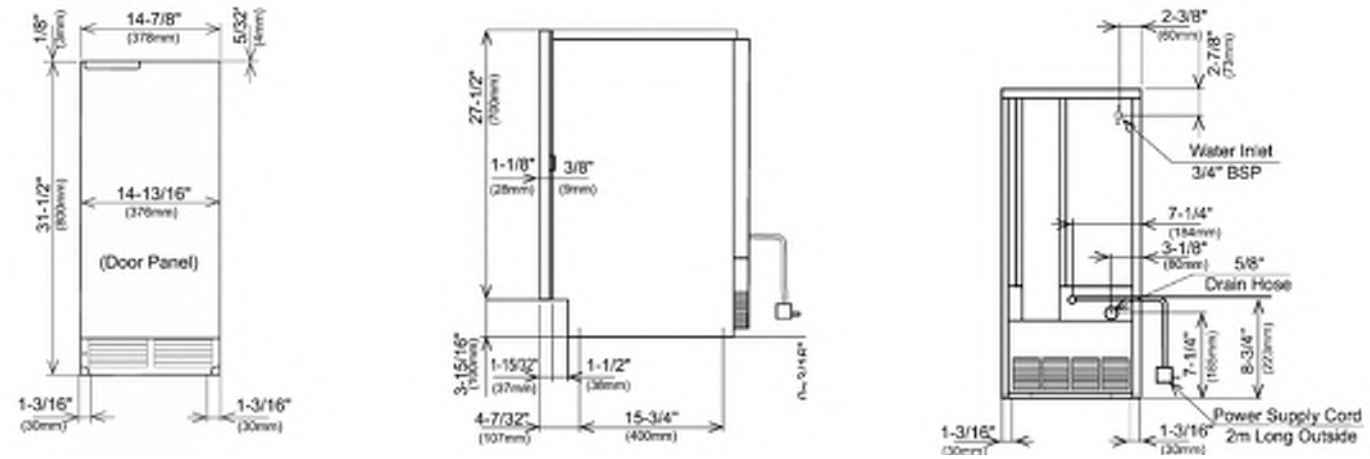

ADA Compliant Series Front, Side and Back View

Form No.H50
Rev. 05.19.2016

8300 W. Good Hope Rd. • Milwaukee, WI 53223 • (800) 558-5592 • Fax: (414) 353-7069 • perlick.com

Perlick is committed to continuous improvement. Therefore, we reserve the right to change specifications without warning.

24" ADA-COMPLIANT SERIES REFRIGERATOR

HA24RB-3 | 24" INDOOR MODEL

ADA UNDERCOUNTER REFRIGERATOR AT KITCHENETTE AND ACTIVITY ROOM

Perlick®

QUALITY & INNOVATION THAT **INSPIRES**

Solid Door Model

Glass Door Model

Drawer Model

GENERAL 24" ADA-COMPLIANT SERIES FEATURES

- 32" height with leveling legs
- 525 Btu commercial-grade compressor
- Front-vented, RAPIDcool forced-air refrigeration system
- Commercial-grade stainless steel interior and black vinyl-clad exterior
- ***Industry Exclusive*** adjustable, full-extension pull-out shelves (drawer models excluded)
- Stainless-steel ball-bearing glides provide smooth movement of shelves
- Low E, UV-coated glass provides industry leading insulation and protection.
- Electromechanical temperature control
- Interior light
- Optional door locks and Industry-Exclusive drawer locks (factory installed)
- Stacking kit available
- Also available - ADA Compliant Freezer, Beverage Center, Wine Reserve and 15" Clear Ice Maker
- 4.8 cubic feet of capacity
- Industry Best Three Year Warranty plus additional three years on sealed system

HA24RB-3 FEATURES

- Available with solid stainless steel door, wood overlay door, stainless steel glass door, wood overlay door, stainless steel drawers or wood overlay drawers
- Door models include two (2) full-extension pull-out shelves
- Drawers are full extension for easy stocking and access of goods
- Refrigerator rated for both food and beverage storage
- Storage for 144 cans
- Refrigerator temperature 33° - 42°F

Form No. HA24RB-3
Rev. 02.09.2017

8300 W. Good Hope Rd. • Milwaukee, WI 53223 • (800) 558-5592 • Fax: (414) 353-7069 • perlick.com

Perlick is committed to continuous improvement. Therefore, we reserve the right to change specifications without warning.

PRODUCT SPECIFICATIONS

Overall Width	23-7/8" (60.64 cm.)
Overall Height	32" (81.28 cm.)
Overall Depth	24" (60.96 cm.)
Opening Width	24" (60.96 cm.)
Opening Height	32-1/8" (81.60 cm.)
Opening Depth	24" (60.96 cm.)
Refrigerated Volume	4.8 cu. ft total
Door Swing Clearance	25" (63.50 cm.)
Electrical	115V, 60Hz., 1 Phase, 2.3 amps
Plumbing	None Required
Shipping Weight	181 lbs (82.27 kg.)
Annual Energy Consumption	295 kWh

INDOOR MODELS

HA24RB-3-1L*	Solid stainless steel door, hinged left
HA24RB-3-2L*	Solid wood overlay door, hinged left
HA24RB-3-3L*	Stainless steel glass door
HA24RB-3-4L*	Wood overlay glass door
HA24RB-3-5	Stainless steel drawers
HA24RB-3-6	Wood overlay drawers

**Also available with right hinge*

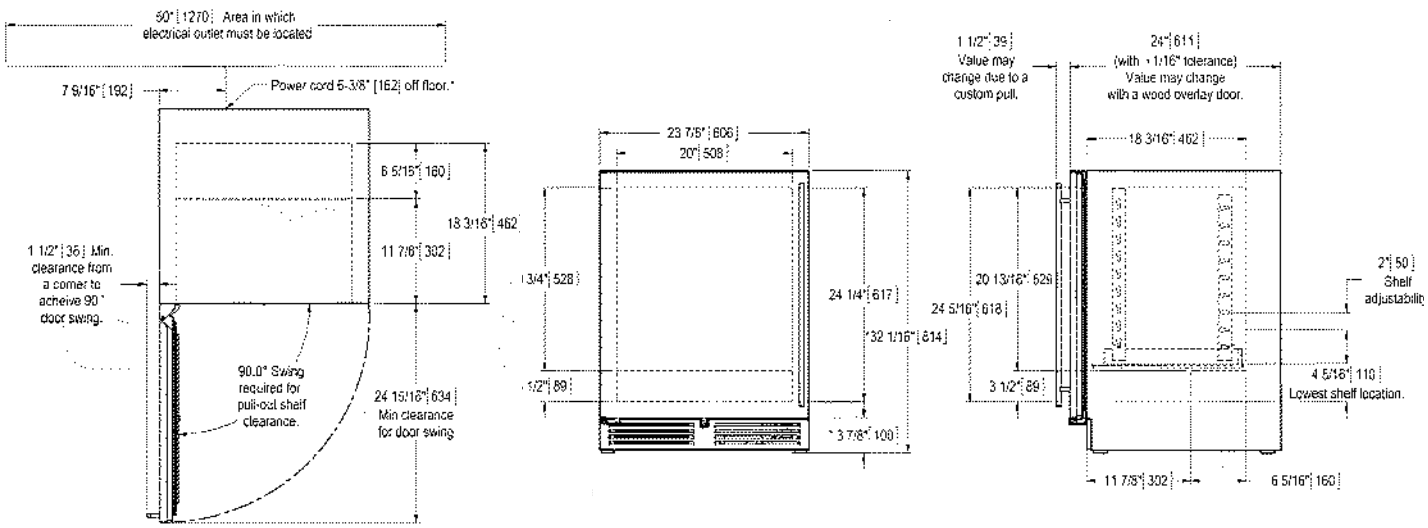

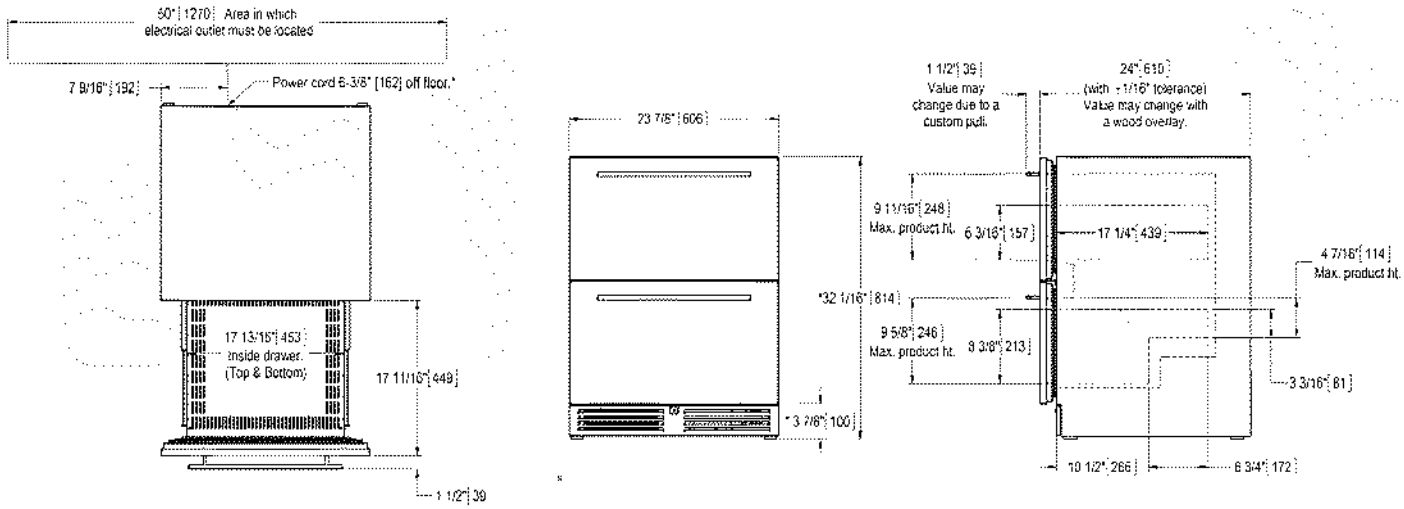

Form No.HA24RB-3
Rev. 02.09.2017

8300 W. Good Hope Rd. • Milwaukee, WI 53223 • (800) 558-5592 • Fax: (414) 353-7069 • perlick.com

Perlick is committed to continuous improvement. Therefore, we reserve the right to change specifications without warning.